Reservdelskatalog
Parts Catalogue

MULTICLIP 47 BLUE

298471048/S15 - Season 2015

● Use GLOBAL GARDEN PRODUCT Genuine Spare Parts specified in the parts list for repair and/or replacement.

● The contents described in the parts list may change due to improvement.

● The drawings of the spare parts are only indicative and might not represent the part in question exactly.

● The indications “right” - “left” - “front” - “rear” refer to the position of the operator when using the machine.

● When placing orders of parts for repair and/or replacement, make sure that the illustrated parts list is the one applying to the machine’s year of manufacture, as shown on the identification plate attached to the machine.

© Copyright 2015 Global Garden Products

All rights reserved. No part of this material may be reproduced or transmitted, in any form or by any means, electronic or mechanical, including photocopying, recording or by any information storage and retrieval system, without permision in writing from GLOBAL GARDEN PRODUCTS.

www.stiga.com

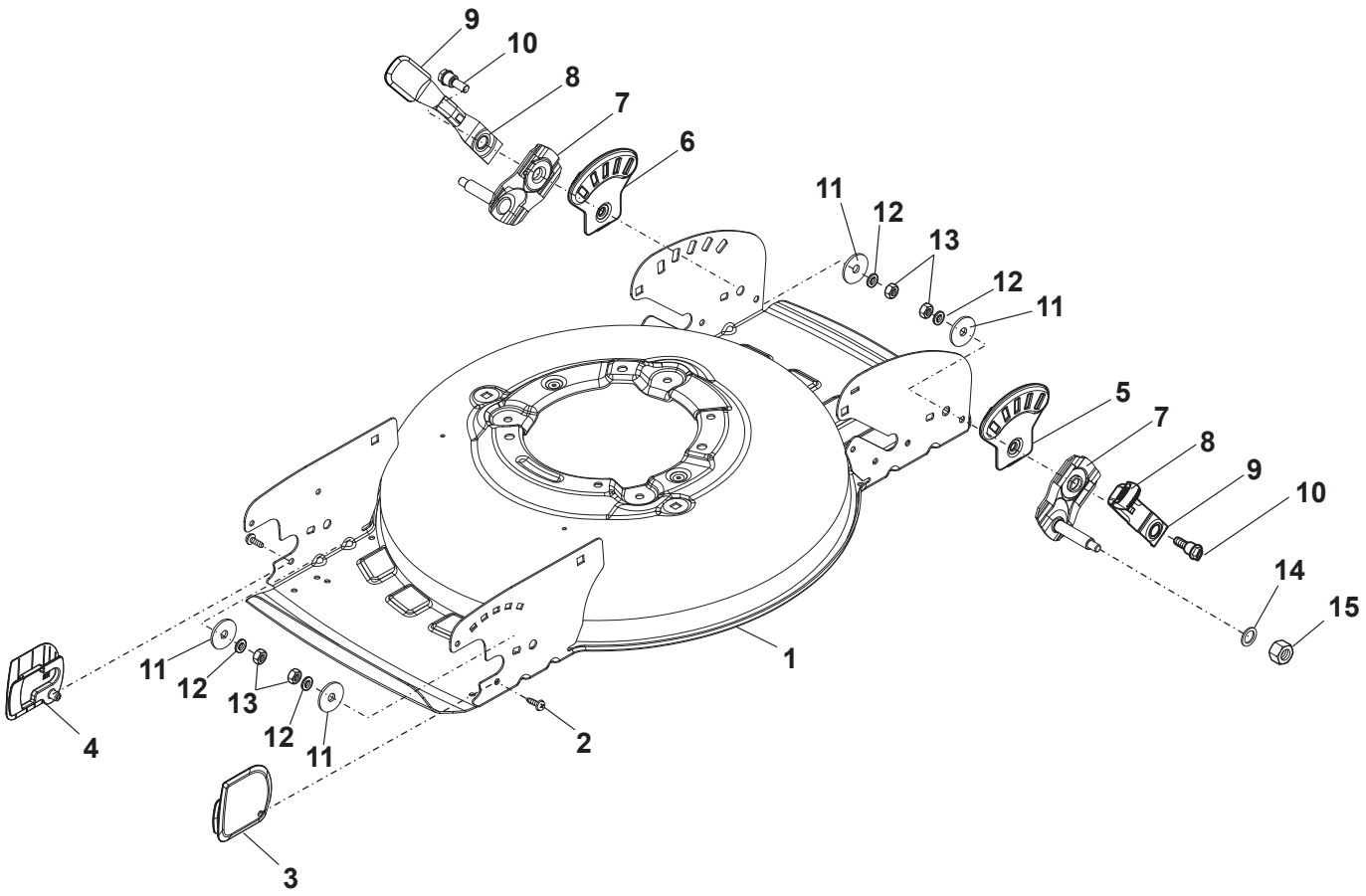

© Copyright 2015 Global Garden Products

Utgåva Issue 20 - 2015	Kapa och höjdinställning	Deck And Height Adjusting			
Pos. Fig.	Antal Q.ty	Art nr Part No	Benämning	Description	Anmärkning Notes
1	1	381004781/0	Chassi-gra	Grey Deck	
2	2	112728697/0	Skruv	Screw	
4	1	322109911/0	Sidoskydd	Right Side Cover	Grey NCS 8000-N
3	1	322109912/0	Sidoskydd	Left Side Cover	Grey NCS 8000-N
5	2	322735597/1	Höjdjustering sektor	Sector, Height Adjustment	
6	2	322735595/1	Höjdjustering sektor	Sector, Height Adjustment	
7	4	381005143/0	Hjulfäste	Wheel Support	
8	4	322321537/0	Höjdinställningsspak	Lever, Height Adjustment	
9	4	122394501/0	Handtagsknopp	Knob	
10	4	122519811/0	Stift	Pin	
11	4	112523070/0	Bricka	Washer	
12	4	112583500/0	Lasbricka	Grower	
13	4	112293200/0	Mutter	Nut	
14	4	112521350/0	Bricka	Washer	
15	4	112155000/0	Mutter	Nut	
16	2	322608569/0	Reinforcement	Reinforcement	
17	2	112815200/0	Skruv	Screw	
18	2	112582100/0	Lasbricka	Grower	
19	2	112292100/0	Mutter	Nut	
20	2	118203853/0	Skruv	Screw	
21	2	118203854/0	Skruv	Screw	

© Copyright 2015 Global Garden Products

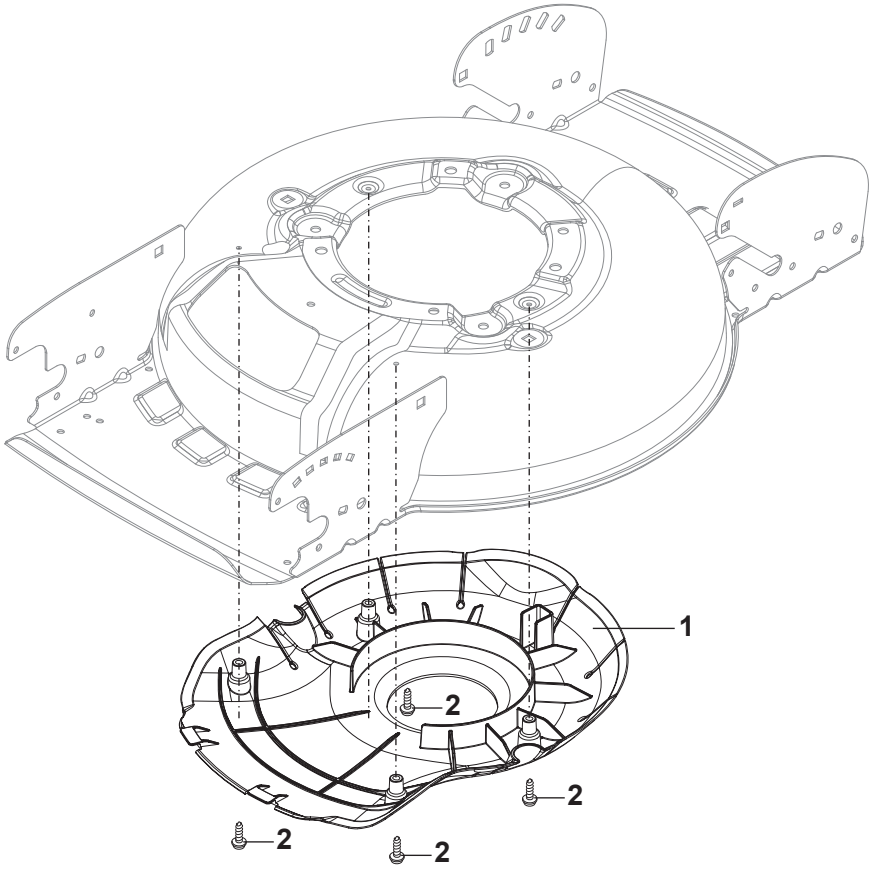

© Copyright 2015 Global Garden Products

Utgåva Issue 20 - 2015		Remskydd		Protection, Belt	
Pos. Fig.	Antal Q.ty	Art nr Part No	Benämning	Description	Anmärkning Notes
1	1	322060269/0	Mulchingplugg	Complete Mulching Carter	
2	4	112728530/0	Skruv	Screw	

© Copyright 2015 Global Garden Products

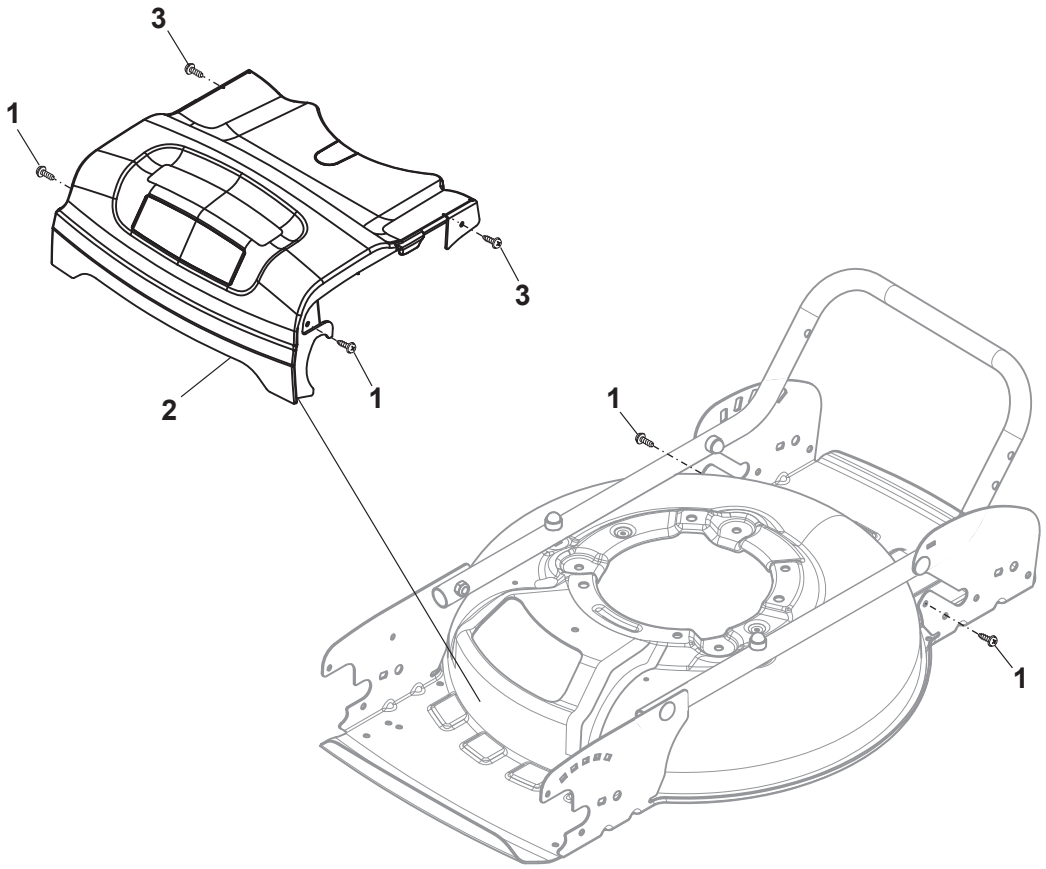

© Copyright 2015 Global Garden Products

Utgåva Issue 20 - 2015	Mask		Mask, Frontal with Handle Version		
Pos. Fig.	Antal Q.ty	Art nr Part No	Benämning	Description	Anmärkning Notes
1	2	112728697/0	Skruv	Screw	
2	1	322226219/0	Frontkapa	Mask, STIGA Grey	
3	2	112728124/0	Skruv	Screw	

© Copyright 2015 Global Garden Products

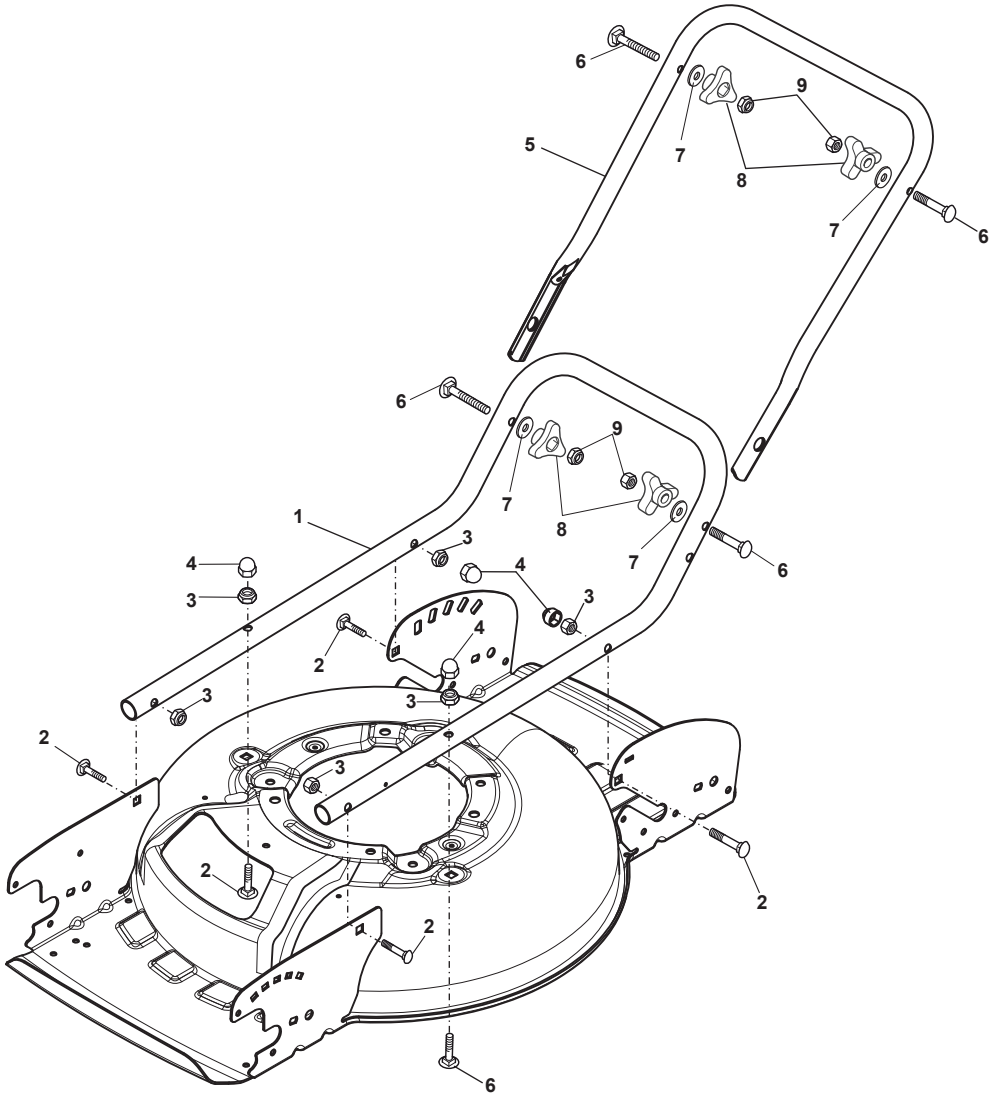
6
9
5
7
8
7
6
6
9
7
8
7
6
1
3
4
4
3
3
2
4
3
3
2
3
2
2
2
6

Utgåva Issue 20 - 2015		Reglage, nedre		Handle, Lower Part	
Pos. Fig.	Antal Q.ty	Art nr Part No	Benämning	Description	Anmärkning Notes
1	1	381007556/0	Reglage, nedre Gul	Handle, Lower Part Yellow	
2	6	112818900/0	Skruv	Screw	
3	6	112155000/0	Mutter	Nut	
4	4	118203854/0	Skruv	Screw	
5	1	381007542/1	Handtag Nedre	Handle, Middle Part Yellow	
6	4	112819121/0	Skruv	Screw	
7	4	122671651/0	Bricka	Washer	
8	4	322399840/0	Handtag Gul	Yellow Knob	Black
9	4	112293200/0	Mutter	Nut	

© Copyright 2015 Global Garden Products

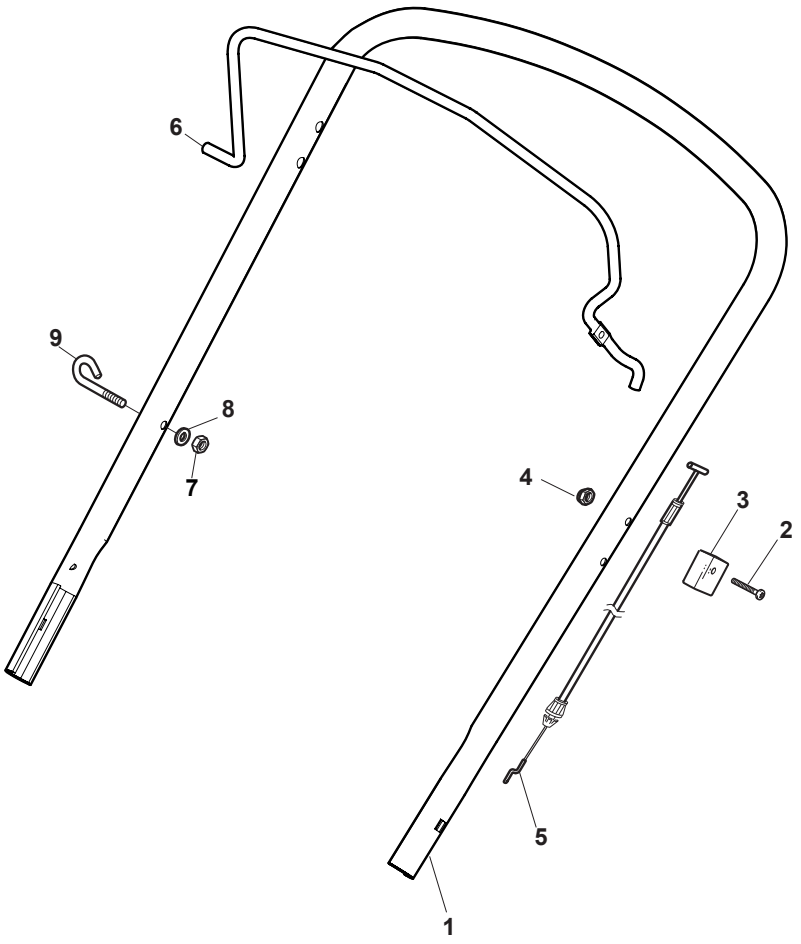

© Copyright 2015 Global Garden Products

Utgåva Issue 20 - 2015		Reglage, övre		Handle, Upper Part	
Pos. Fig.	Antal Q.ty	Art nr Part No	Benämning	Description	Anmärkning Notes
1	1	381007555/0	Styre-överdel	Handle, Upper Part	Yellow
2	1	112727788/0	Skruv	Screw	
3	1	322551640/0	Plat	Plate	
4	1	112154510/0	Mutter	Nut	
5	1	181030084/0	Motorbromswire	Cable, Thread Engine Brake	for B&S-GGP-Honda Engine
6	1	181003369/0	Reglagebygel	Lever, Engine Brake	
7	1	112154510/0	Mutter	Nut	
8	1	112521330/0	Bricka	Washer	
9	1	122430313/0	Fjäder	Guide Spring	

© Copyright 2015 Global Garden Products

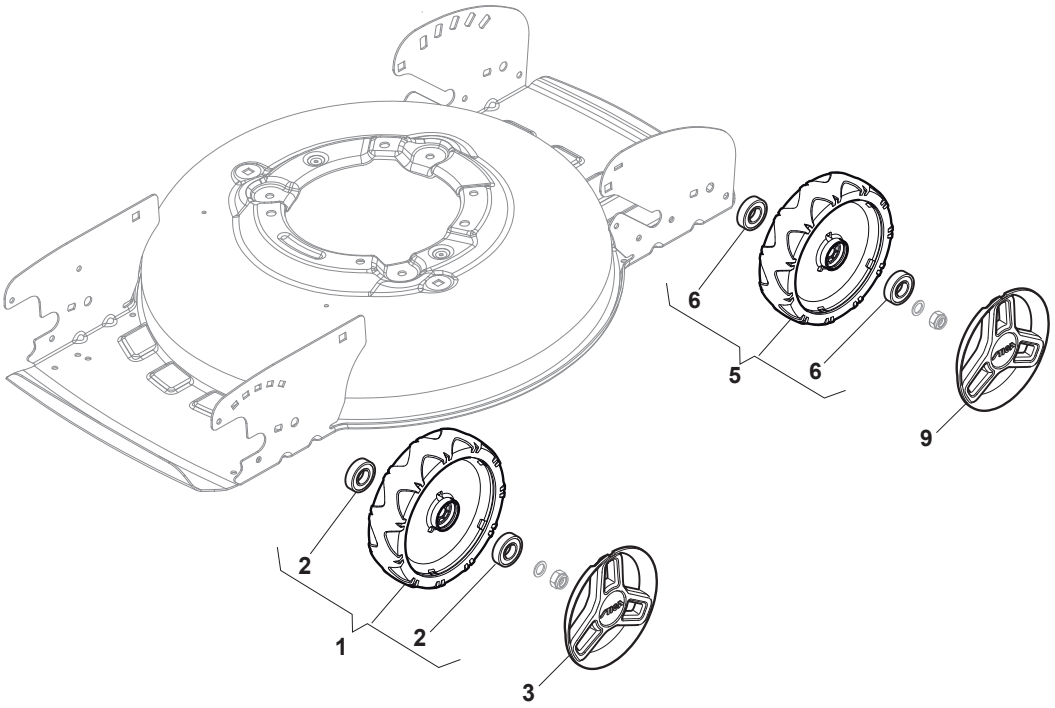

© Copyright 2015 Global Garden Products

Utgåva Issue 20 - 2015		Hjul och navkapsel		Wheels and Hub Caps	
Pos. Fig.	Antal Q.ty	Art nr Part No	Benämning	Description	Anmärkning Notes
1	2	381007455/1	Hjul	Wheel	
2	4	119216035/0	Lager	Bearing	
3	2	322110744/0	Navkapsel Gra	Hub Cap Grey	
5	2	381007455/1	Hjul	Wheel	
6	4	119216035/0	Lager	Bearing	
9	2	322110744/0	Navkapsel Gra	Hub Cap Grey	

© Copyright 2015 Global Garden Products

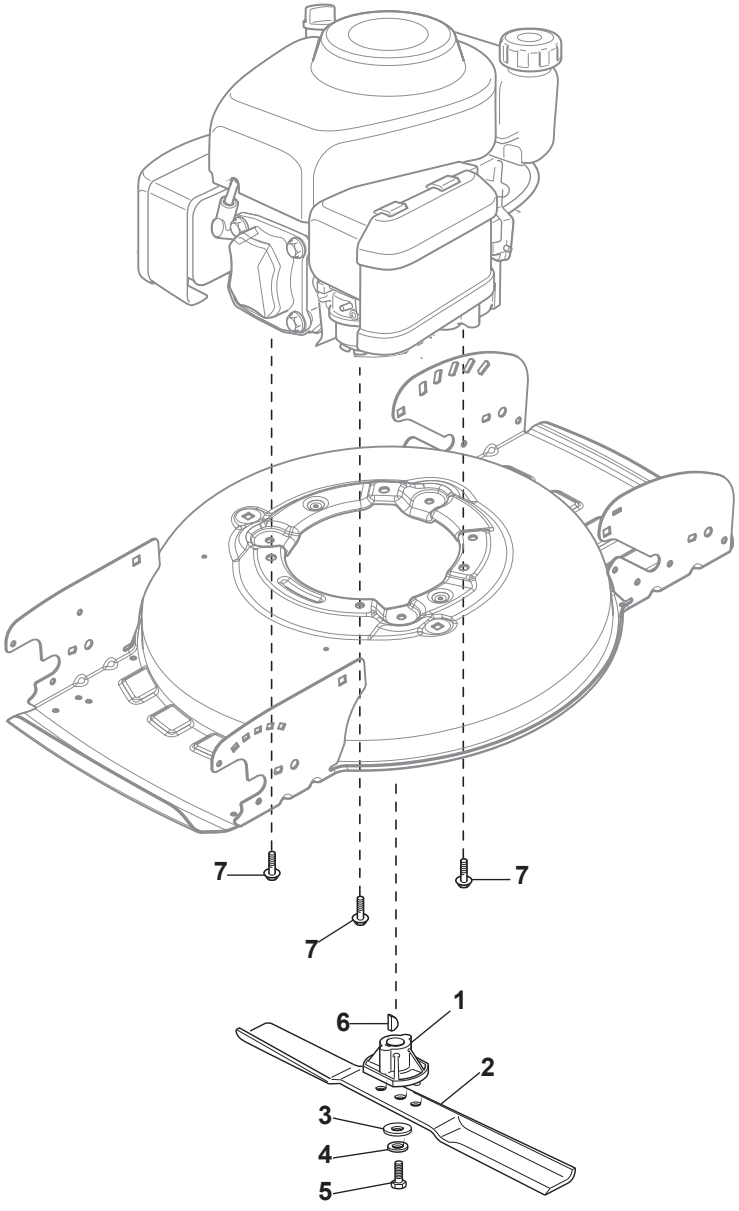

© Copyright 2015 Global Garden Products

Utgåva Issue 20 - 2015		Kniv	Blade		
Pos. Fig.	Antal Q.ty	Art nr Part No	Benämning	Description	Anmärkning Notes
1	1	122463012/2	Knivfäste	Hub, Crankshaft Ø 22.2	GGP/B&S Engine
2	1	181004158/0	Mulcherkniv	Mulching Blade	
3	1	112508125/0	Bricka	Elastic Washer	
4	1	112523080/0	Bricka	Washer	
5	1	112735698/0	Skruv	Screw	
6	1	112139100/0	Kil D22Mm	Feather, Crankshaft Ø 22	GGP/B&S Engine
7	3	112735109/1	Skruv	Screw	

© Copyright 2015 Global Garden Products

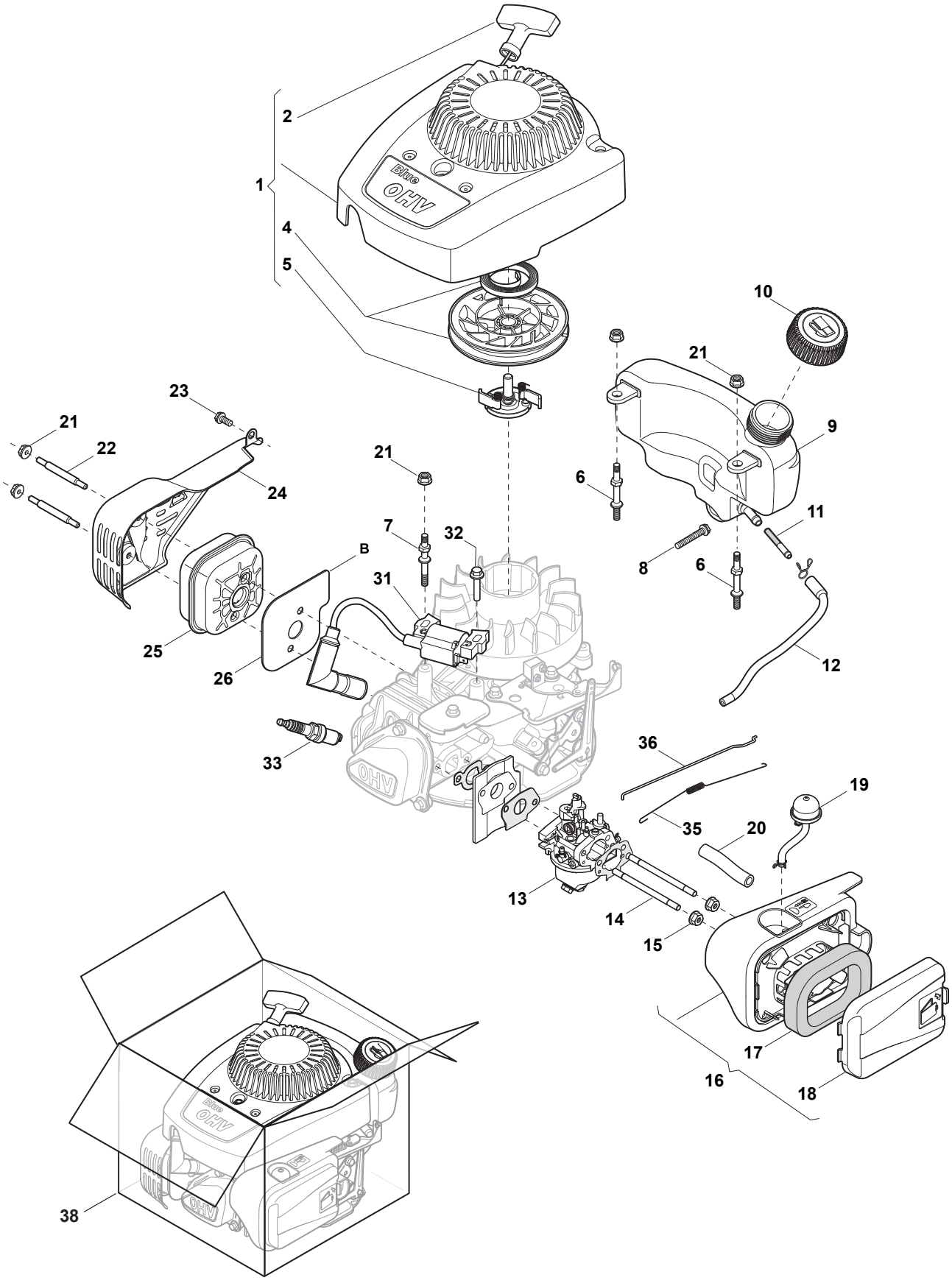
1
2
4
5
6
7
8
9
10
11
12
13
14
15
16
17
18
19
20
21
22
23
24
25
26
31
32
33
35
36
38
B
OHV

Utgåva Issue 20 - 2015	Motor - GGP RV100	Engine - GGP RV100

Pos. Fig.	Antal Q.ty	Art nr Part No	Benämning	Description	Anmärkning Notes
1	1	118550693/0	Start kpl	Starter Assy Cover	
2	1	118550694/0	Starthandtag	Starter Handle	
4	1	118550695/0	Remskiva	Starter Pulley	
5	1	118550696/0	Startspärr	Starter Pawl Set	
6	2	118550713/0	Skruv	Screw	
7	1	118550714/0	Skruv	Screw	
8	1	112689515/0	Skruv	Screw	
9	1	118550712/0	Bränsletank	Fuel Tank	
10	1	118550711/0	Tanklock	Fuel Cap	
11	1	118550715/0	Bränslefilter	Fuel Filter	
12	1	118550716/0	Bränsleslang	Fuel Pipe	
13	1	118550697/0	Förgasare Kpl	Carburetor	
14	2	118550706/0	Skruv	Screw	
15	2	112292102/0	Mutter	Nut	
16	1	118550702/0	Luftfilter kpl	Air Cleaner Assy	
17	1	118550704/0	Luftfilter	Air Filter	
18	1	118550703/0	Luftfilterkapa	Air Cleaner Cover	
19	1	118550698/0	Luftreningspump	Air Purge Pump	
20	1	118550705/0	Avgasrör	Breather Fule Pipe	
21	2	112292102/0	Mutter	Nut	
21	3	112292102/0	Mutter	Nut	
22	2	118550710/0	Skruv	Screw	
23	1	112735699/0	Skruv	Screw	
24	1	118550709/0	Ljuddämparskydd	Muffler Guard	
25	1	118550708/0	Ljuddämpare	Muffler	
26	1	118550707/0	Ljuddämparpackning	Muffler Gasket	
31	1	118550719/0	Elektronikspole	Electronic Coil	
32	1	112792099/0	Skruv	Screw	
33	1	118550658/0	Tändstift - K7Rtc	Spark Plug	
35	1	118550720/0	Fjäder	Spring	
36	1	118550721/0	Reglagestang	Governor Link	
38	1	118550732/0	Ggp Motor Rs100	Engine Assembled	

© Copyright 2015 Global Garden Products

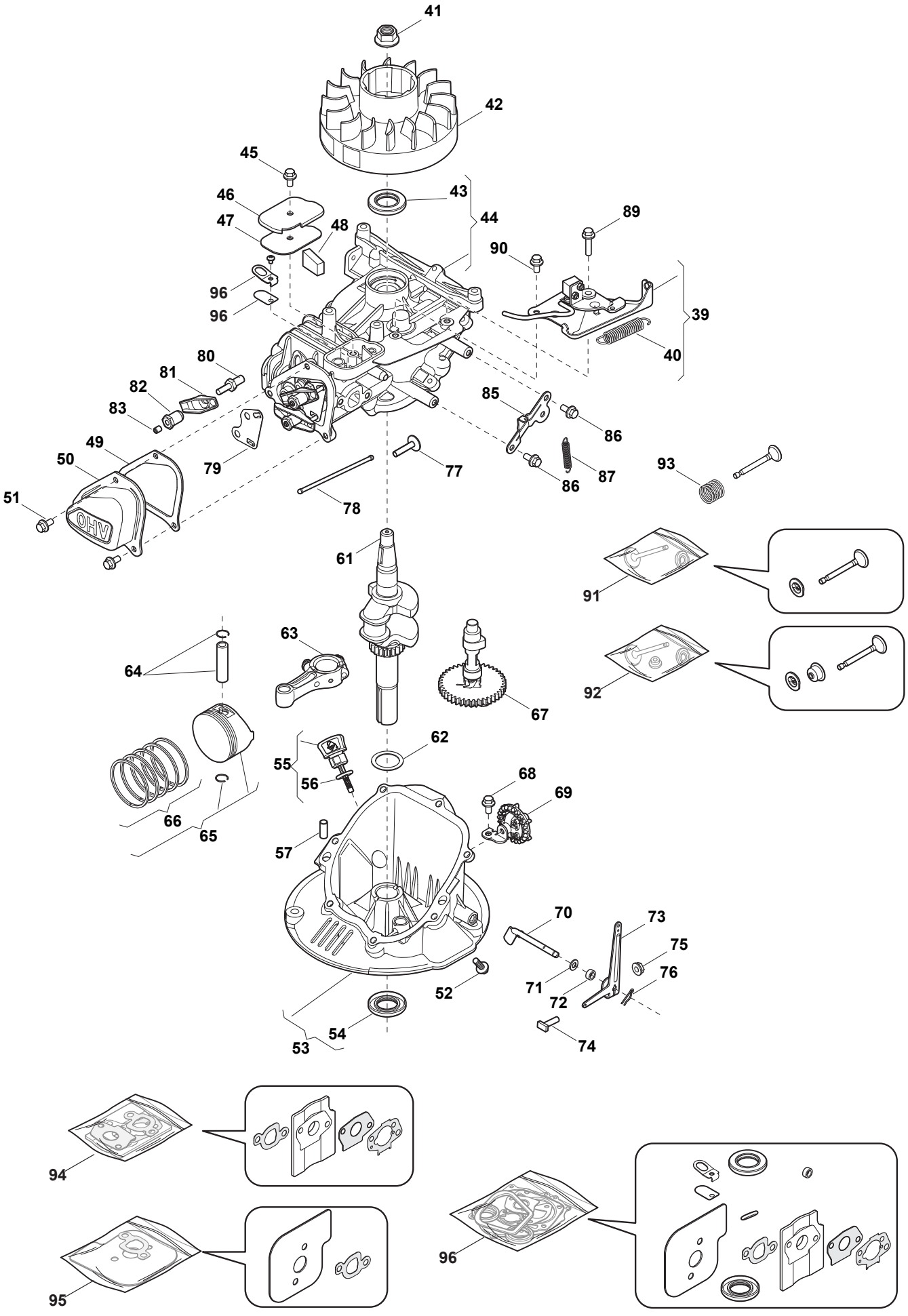
41
42
45
46
47
48
43
44
89
90
96
96
39
40
80
81
82
83
85
86
49
50
51
OHV
79
77
78
86
87
93
61
91
63
64
67
92
62
55
56
68
69
66
65
57
70
73
75
76
71
72
52
54
53
74
94
95
96

Utgåva Issue 20 - 2015	Motor - GGP RV100	Engine - GGP RV100			
Pos. Fig.	Antal Q.ty	Art nr Part No	Benämning	Description	Anmärkning Notes
39	1	118550728/0	Broms Kpl	Brake assy	
40	1	118550727/0	Fjäder	Spring	
41	1	118550717/0	Mutter	Nut	
42	1	118550718/0	Svänghjul kpl	Flywheel Ass.Y	
43	1	118550661/0	Oljeätning	Oil Seal	
44	1	118550729/0	Topplock	Cylinder Head Assy	
45	1	112735699/0	Skruv	Screw	
46	1	118550659/0	Kapa	Cover	
47	1	118550733/0	Packning	Gasket, Breath Groove	
48	1	118550660/0	Oljefilter	Oil Filter	
49	1	118550680/0	Packning	Gasket	
50	1	118550681/0	Kapa, cylinderhuvud	Cover Comp., Head	
51	3	112735699/0	Skruv	Screw	
52	7	112791500/0	Skruv	Screw	
53	1	118550672/0	Vevhus kapa kpl	Crankase Cover Assy	
54	1	118550668/0	Tätning	Oil Seal	
55	1	118550669/0	Oljesticka	Tank Cap	
56	1	118550670/0	Tätningsring	Or Ring	
57	2	118550664/0	Stift	Pin	
61	1	118550674/0	Vevaxel kpl	Crankshaft	
62	1	118550673/0	Bricka	Washer	
63	1	118550675/0	Vevstake	Connecting Rod Assy	
64	1	118550678/0	Kolvsprint	Circlip + Piston Pin	
65	1	118550677/0	Kolv kpl	Piston Assy	
66	1	118550679/0	Kolvringssats	Piston, Ring Set	
67	1	118550682/0	Kamaxel	Camshaft assy	
68	1	112735699/0	Skruv	Screw	
69	1	118550662/0	Växel kpl, Regulator	Speed Governor Assy	
70	1	118550665/0	Regulatoraxel	Shaft, Governor Arm	
71	1	118550666/0	Bricka	Washer	
72	1	118550671/0	Packning	Gasket	
73	1	118550723/0	Stöd	Support Governor	
74	1	118550726/0	Skruv	Screw	
75	1	118550722/0	Mutter	Nut	
76	1	118550667/0	Harnalsprint	Cotter Pin	
77	2	118550683/0	Ventillyftare	Valve Lifter	
78	2	118550684/0	Tryckstang	Push Rods	
79	1	118550685/0	Plat	Plate	
80	2	118550686/0	Skruv	Screw	
81	2	118550687/0	Vippventil	Valve Arm	
82	2	118550688/0	Mutter	Nut	
83	2	118550689/0	Mutter	Nut	
85	1	118550724/0	Plat	Plate	
86	2	112735699/0	Skruv	Screw	
87	1	118550725/0	Fjäder	Spring	
89	1	112791500/0	Skruv	Screw	
90	1	112735699/0	Skruv	Screw	
91	2	118550692/0	Avgasventil	Exhaust Valve Assy	
92	2	118550691/0	Insugningsventil Kpl	Intake Valve Assy	

© Copyright 2015 Global Garden Products

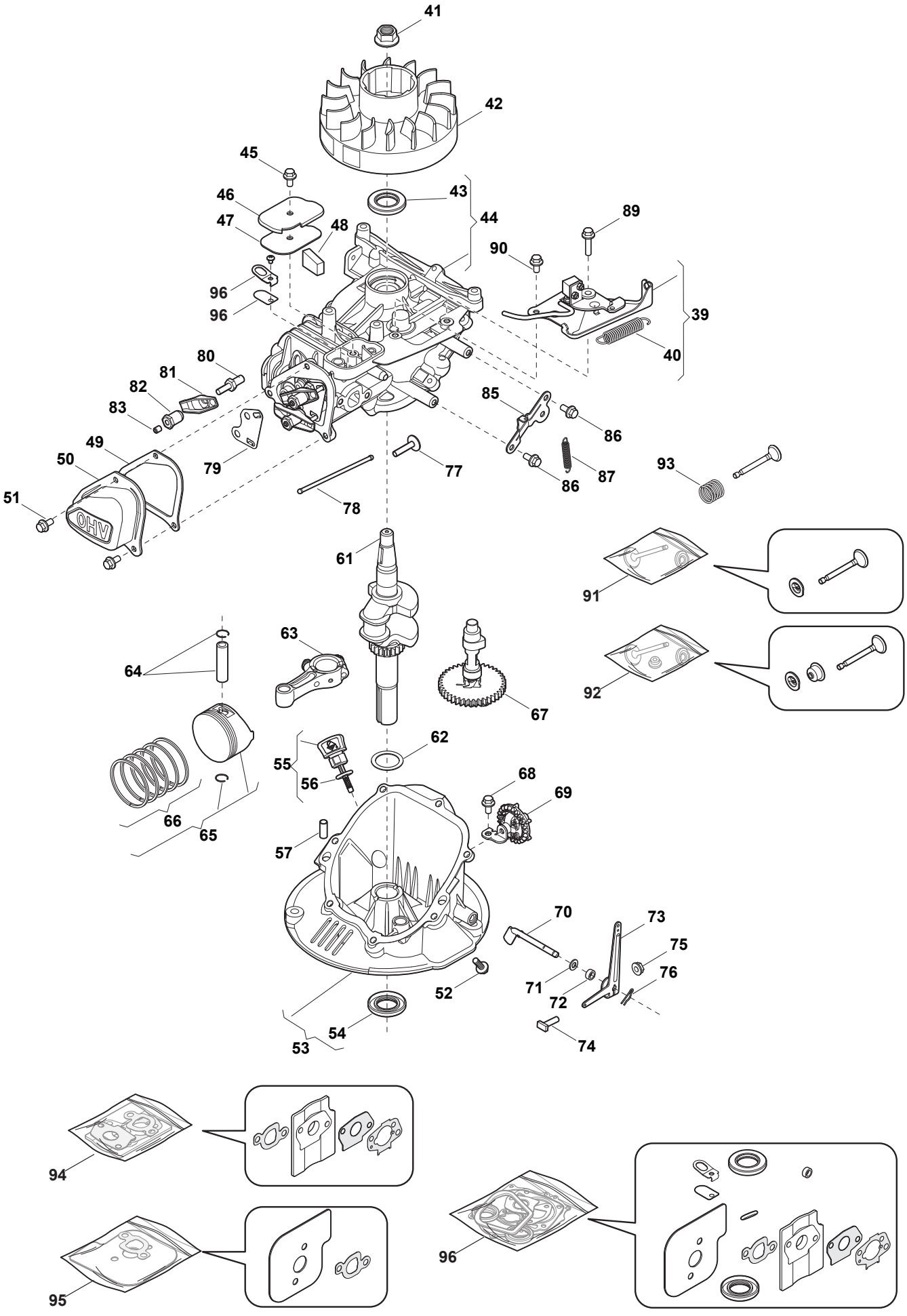
41
42
45
46
47
48
43
44
89
90
96
96
39
40
80
81
82
83
85
86
49
50
51
OHV
79
77
78
86
87
93
61
91
92
63
64
67
62
55
56
68
69
66
65
57
70
73
75
76
71
72
52
54
53
74
94
95
96

Utgåva Issue 20 - 2015	Motor - GGP RV100	Engine - GGP RV100			
Pos. Fig.	Antal Q.ty	Art nr Part No	Benämning	Description	Anmärkning Notes
93	2	118550690/0	Fjäder	Spring	
94	1	118550699/0	Förgasarpackning kpl	Carburettor Gasket Set	
95	1	118550731/0	Packningssats (Cylinder)	Cylinder Head Gasket Set	
96	1	118550730/0	Packningssats	Engine Gasket Set	

© Copyright 2015 Global Garden Products

code	pos.	q.ty	page
112139100/0	6	1	p. 15
112154510/0	4	1	p. 11
112154510/0	7	1	p. 11
112155000/0	3	6	p. 9
112155000/0	15	4	p. 3
112292100/0	19	2	p. 3
112292102/0	15	2	p. 17
112292102/0	21	2	p. 17
112292102/0	21	3	p. 17
112293200/0	9	4	p. 9
112293200/0	13	4	p. 3
112508125/0	3	1	p. 15
112521330/0	8	1	p. 11
112521350/0	14	4	p. 3
112523070/0	11	4	p. 3
112523080/0	4	1	p. 15
112582100/0	18	2	p. 3
112583500/0	12	4	p. 3
112689515/0	8	1	p. 17
112727788/0	2	1	p. 11
112728124/0	3	2	p. 7
112728530/0	2	4	p. 5
112728697/0	1	2	p. 7
112728697/0	2	2	p. 3
112735109/1	7	3	p. 15
112735698/0	5	1	p. 15
112735699/0	23	1	p. 17
112735699/0	45	1	p. 19
112735699/0	51	3	p. 19
112735699/0	68	1	p. 19
112735699/0	86	2	p. 19
112735699/0	90	1	p. 19
112791500/0	52	7	p. 19
112791500/0	89	1	p. 19
112792099/0	32	1	p. 17
112815200/0	17	2	p. 3
112818900/0	2	6	p. 9
112819121/0	6	4	p. 9
118203853/0	20	2	p. 3
118203854/0	4	4	p. 9
118203854/0	21	2	p. 3
118550658/0	33	1	p. 17
118550659/0	46	1	p. 19
118550660/0	48	1	p. 19
118550661/0	43	1	p. 19
118550662/0	69	1	p. 19
118550664/0	57	2	p. 19
118550665/0	70	1	p. 19
118550666/0	71	1	p. 19
118550667/0	76	1	p. 19
118550668/0	54	1	p. 19
118550669/0	55	1	p. 19
118550670/0	56	1	p. 19
118550671/0	72	1	p. 19
118550672/0	53	1	p. 19
118550673/0	62	1	p. 19
118550674/0	61	1	p. 19
118550675/0	63	1	p. 19
118550677/0	65	1	p. 19
118550678/0	64	1	p. 19
118550679/0	66	1	p. 19
118550680/0	49	1	p. 19
118550681/0	50	1	p. 19
118550682/0	67	1	p. 19
118550683/0	77	2	p. 19
118550684/0	78	2	p. 19
118550685/0	79	1	p. 19
118550686/0	80	2	p. 19
118550687/0	81	2	p. 19
118550688/0	82	2	p. 19
118550689/0	83	2	p. 19
118550690/0	93	2	p. 21
118550691/0	92	2	p. 19
118550692/0	91	2	p. 19
118550693/0	1	1	p. 17
118550694/0	2	1	p. 17
118550695/0	4	1	p. 17
118550696/0	5	1	p. 17
118550697/0	13	1	p. 17
118550698/0	19	1	p. 17
118550699/0	94	1	p. 21
118550702/0	16	1	p. 17
118550703/0	18	1	p. 17
118550704/0	17	1	p. 17
118550705/0	20	1	p. 17
118550706/0	14	2	p. 17
118550707/0	26	1	p. 17
118550708/0	25	1	p. 17
118550709/0	24	1	p. 17
118550710/0	22	2	p. 17
118550711/0	10	1	p. 17
118550712/0	9	1	p. 17
118550713/0	6	2	p. 17
118550714/0	7	1	p. 17
118550715/0	11	1	p. 17
118550716/0	12	1	p. 17
118550717/0	41	1	p. 19
118550718/0	42	1	p. 19
118550719/0	31	1	p. 17
118550720/0	35	1	p. 17
118550721/0	36	1	p. 17
118550722/0	75	1	p. 19
118550723/0	73	1	p. 19
118550724/0	85	1	p. 19
118550725/0	87	1	p. 19
118550726/0	74	1	p. 19
118550727/0	40	1	p. 19
118550728/0	39	1	p. 19
118550729/0	44	1	p. 19
118550730/0	96	1	p. 21
118550731/0	95	1	p. 21
118550732/0	38	1	p. 17
118550733/0	47	1	p. 19
119216035/0	2	4	p. 13
119216035/0	6	4	p. 13
122394501/0	9	4	p. 3
122430313/0	9	1	p. 11
122463012/2	1	1	p. 15
122519811/0	10	4	p. 3
122671651/0	7	4	p. 9
181003369/0	6	1	p. 11
181004158/0	2	1	p. 15
181030084/0	5	1	p. 11
322060269/0	1	1	p. 5
322109911/0	4	1	p. 3
322109912/0	3	1	p. 3
322110744/0	3	2	p. 13
322110744/0	9	2	p. 13
322226219/0	2	1	p. 7
322321537/0	8	4	p. 3
322399840/0	8	4	p. 9
322551640/0	3	1	p. 11
322608569/0	16	2	p. 3
322735595/1	6	2	p. 3
322735597/1	5	2	p. 3
381004781/0	1	1	p. 3
381005143/0	7	4	p. 3
381007455/1	1	2	p. 13
381007455/1	5	2	p. 13
381007542/1	5	1	p. 9
381007555/0	1	1	p. 11
381007556/0	1	1	p. 9

© Copyright 2015 Global Garden Products